TEKTELIC Communications Inc.
7657 10th Street NE Calgary, Alberta
Canada, T2E 8X2

KONA Macro Ex Gateway

User Guide

Document Type:	User Guide
Document Number:	T0009080
Document Version:	1.5
Issue Date:	Oct. 09, 2026
Product Name:	KONA Macro Ex Gateway
Model Numbers:	T000906x, T000907x

PROPRIETARY:
The information contained in this document is the property of TEKTELIC Communications Inc. Except as specifically authorized in writing by TEKTELIC, the holder of this document shall keep all information contained herein confidential, and shall protect the same in whole or in part from disclosure to all third parties.

© 2026 TEKTELIC Communications Inc., all rights reserved.
All products, names, and services are trademarks and registered trademarks of their respective companies

Table of Contents

Table of Contents 2

List of Tables 3

List of Figures 4

1. Product Description 5
   - 1.1. Overview 5
   - 1.2. Specifications 8
   - 1.3. Certifications 9
   - 1.4. Exposed services 9

2. Installation 10
   - 2.1. Safety Precautions 10
   - 2.2. Specific Conditions of Use 11
   - 2.3. Unpacking and Inspection 12
   - 2.4. Required Equipment for Installation 12
   - 2.5. Mounting 13
   - 2.6. Enclosure Bulkhead Interface 16
   - 2.7. Ground Cable Installation 18
   - 2.8. LoRa RF Antenna Connection 19
   - 2.9. Cellular RF Antenna Connections 20
   - 2.10. GPS RF Antenna Connection 20
   - 2.11. Opening and Closing the Enclosure 21
   - 2.12. Cable Entry 24
   - 2.13. Internal Interfaces 24
   - 2.14. SIM Installation 26

3. Usage 27
   - 3.1. Prevention of Electrostatic Charge Buildup 27
   - 3.2. Maintenance 27

4. Radio Compliance Statements 28

Document History 30

List of Tables

Table 1: KONA Macro Ex Gateway Models 5
Table 2: KONA Macro Ex Gateway Kits 5
Table 3: KONA Macro Ex Gateway Specifications 8
Table 4: KONA Macro Ex Gateway Certifications 9
Table 5: KONA Macro Ex Gateway Bulkhead Component Torque Specifications 17
Table 6: KONA Macro Ex Gateway Internal Connection Specifications 25

List of Figures

Figure 1: KONA Macro Ex Gateway External 7
Figure 2: KONA Macro Ex Gateway Opened 8
Figure 3: KONA Macro Ex Mounting Tab Installation 14
Figure 4: KONA Macro Ex Mounting Hardware Location, 0° Tab Orientation 15
Figure 5: KONA Macro Ex Mounting Hardware Location, 45° Tab Orientation 15
Figure 6: KONA Macro Ex Mounting Hardware Location, 90° Tab Orientation 16
Figure 7: KONA Macro Ex Gateway Bulkhead Layout 17
Figure 8: KONA Macro Ex Gateway PE Ground Connection Location 18
Figure 9: KONA Macro Ex Gateway PE Ground Installation 19
Figure 10: KONA Macro Ex Gateway Cover Pry Feature Location 22
Figure 11: KONA Macro Ex Gateway Cover Screw Hardware Stack-up 23
Figure 12: KONA Macro Ex Gateway Recommended Cover Screw Torque Pattern 23
Figure 13: KONA Macro Ex Gateway Internal Interface Connections 25
Figure 14: KONA Macro Ex SIM Tray Location 26

1. Product Description

1.1. Overview

This document is the User Guide for the KONA Macro Ex Gateway developed by TEKTELIC Communications Inc. This document provides information pertinent to the Hazardous Location and Explosive Atmospheres (Ex) versions of the Macro Gateway family and shall be read in conjunction with the KONA Macro Gateway User Guide, document T0005158_UG, for complete and detailed commissioning and operational information.

KONA Macro Ex is a Zone 1/21, Class I/II Div 1 LoRaWAN IoT Gateway which supports the full range of LoRaWAN channels. The Gateway is IP66 and type 4X rated for outdoor locations but may also be deployed in indoor locations.

The available Gateway interfaces include:

- A copper Ethernet port, supporting also Power over Ethernet (PoE), accessible through an M25 or ¾" NTP threaded entry (according to factory order)
- A 48V DC power port, accessible through an M25 or ¾" NTP threaded entry (according to factory order)
- An intrinsically safe LoRa RF antenna port
- Two intrinsically safe Cellular RF antenna ports for main & diversity (optional according to factory order)
- An intrinsically safe passive GPS antenna port

All interfaces are surge protected to primary levels, no additional surge protection is recommended at the Gateway.

Table 1 lists the currently available KONA Macro Ex Gateway models.

Table 1: KONA Macro Ex Gateway Models

Model	Description
T0009060	North America 915 MHz FDD, M25, Cellular, Geolocation
T0009061	Europe 868 MHz TDD, M25, Cellular, Geolocation
T0009062	Australia 915 MHz TDD, M25, Cellular, Geolocation
T0009063	Australia 923 MHz TDD, M25, Cellular, Geolocation

Table 2 lists the currently orderable KONA Macro Ex Gateway plus antenna kits.

Table 2: KONA Macro Ex Gateway Kits

Gateway Ant. Kit	Order Code	Description	Cellular Modem	Geo-location	Region	Channel Plan	Mode
T0009060, T0009302	MITX3LUS915	KONA MACRO EX, 2.5 dBi antenna kit	Yes	Yes	North America	NA915	FDD

Gateway Ant. Kit	Order Code	Description	Cellular Modem	Geo-location	Region	Channel Plan	Mode
T0009061, T0009302	MITX3LEU868	KONA MACRO EX, 2.5 dBi antenna kit	Yes	Yes	Europe	EU868	TDD
T0009061, T0009302	MITX3LIN865	KONA MACRO EX, 2.5 dBi antenna kit	Yes	Yes	India	IN865	TDD
T0009062, T0009302	MITX3LAU915	KONA MACRO EX, 2.5 dBi antenna kit	Yes	Yes	Australia, New Zealand	AU915	TDD
T0009063, T0009302	MITX3LAS9231	KONA MACRO EX, 2.5 dBi antenna kit	Yes	Yes	Other regions	AS923	TDD
T0009063, T0009302	MITX3LAS9232	KONA MACRO EX, 2.5 dBi antenna kit	Yes	Yes	Other regions	AS923-2	TDD
T0009062, T0009302	MITX3LAS9233	KONA MACRO EX, 2.5 dBi antenna kit	Yes	Yes	Other regions	AS923-3	TDD
T0009062, T0009302	MITX3LAS9234	KONA MACRO EX, 2.5 dBi antenna kit	Yes	Yes	Other regions	AS923-4	TDD
T0009063, T0009302	MITX3LKR920	KONA MACRO EX, 2.5 dBi antenna kit	Yes	Yes	Korea	KR920	TDD
T0009060, T0009301	MITX6LUS915	KONA MACRO EX, 6 dBi antenna kit	Yes	Yes	North America	NA915	FDD
T0009061, T0009301	MITX6LEU868	KONA MACRO EX, 6 dBi antenna kit	Yes	Yes	Europe	EU868	TDD
T0009061, T0009301	MITX6LIN865	KONA MACRO EX, 6 dBi antenna kit	Yes	Yes	India	IN865	TDD
T0009062, T0009301	MITX6LAU915	KONA MACRO EX, 6 dBi antenna kit	Yes	Yes	Australia, New Zealand	AU915	TDD
T0009063, T0009301	MITX6LAS9231	KONA MACRO EX, 6 dBi antenna kit	Yes	Yes	Other regions	AS923	TDD
T0009063, T0009301	MITX6LAS9232	KONA MACRO EX, 6 dBi antenna kit	Yes	Yes	Other regions	AS923-2	TDD
T0009062, T0009301	MITX6LAS9233	KONA MACRO EX, 6 dBi antenna kit	Yes	Yes	Other regions	AS923-3	TDD
T0009062, T0009301	MITX6LAS9234	KONA MACRO EX, 6 dBi antenna kit	Yes	Yes	Other regions	AS923-4	TDD
T0009063, T0009301	MITX6LKR920	KONA MACRO EX, 6 dBi antenna kit	Yes	Yes	Korea	KR920	TDD

Figure 1 illustrates the external view of the typical KONA Macro Ex Gateway.

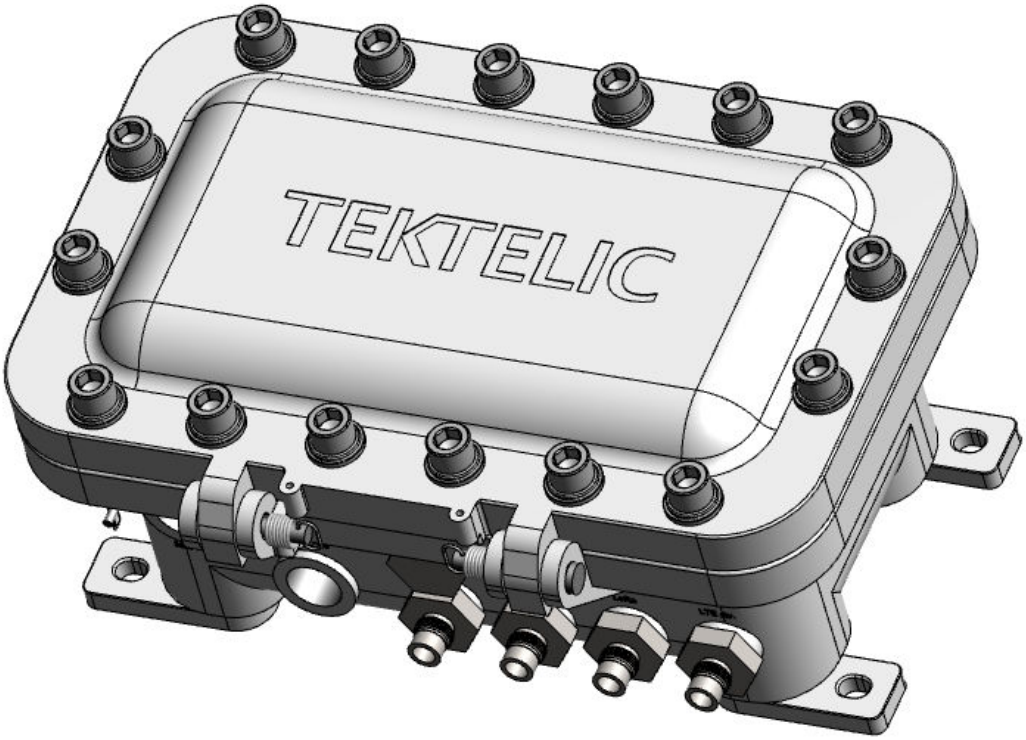

Figure 1: KONA Macro Ex Gateway External

Figure 2 illustrates the internal view of the KONA Macro Ex Gateway when the enclosure cover is opened.

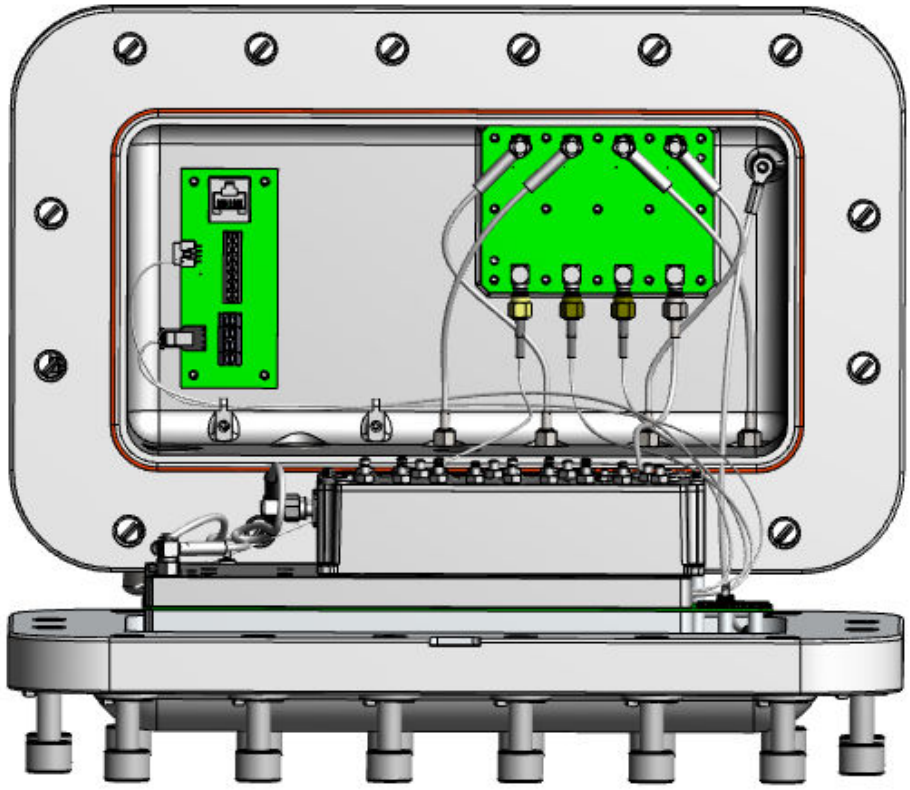

Figure 2: KONA Macro Ex Gateway Opened

1.2. Specifications

The KONA Macro Ex Gateway specifications are listed in Table 3.

Table 3: KONA Macro Ex Gateway Specifications

Attribute	Specification
Dimensions	352 mm (13.86”) wide x 247 mm (9.72”) high x 158 mm (6.22”) deep (excluding mounting ears which add 10 mm (0.39”) to the depth)
Weight	15 kg (33 lbs)
Operating Temperature	-40 °C to 60 °C (-40 °F to 140 °F)
Relative Humidity	10% to 100%
Operating Altitude	-60 m to 4,000 m (-197 ft to 13,123 ft)
Power Input, Direct DC	48 Vdc nominal, 37 to 57 Vdc operating range, 0.6 A maximum Positive or negative ground referenced feed SELV or LPS source required Maximum 10 A input overcurrent protection
Power Input, PoE	IEEE 802.3at or newer Mode A or Mode B or 4-pair mode accepted
Power Consumption	15 W maximum average in normal operation
Surge Protection	All interfaces are protected to IEC 61000-4-5 Class 5

1.3. Certifications

The KONA Macro Ex Gateway certifications are listed in Table 4.

Table 4: KONA Macro Ex Gateway Certifications

Certification	Specification	Marking
EMC	FCC Pt. 15 Class B RSS-247 EN 301 489-1	FCC, IC, CE, C US
Equipment Safety	CSA C22.2 NO. 62368-1:19 UL 62368-1 Ed 3 IEC 62368-1:2018 EN IEC 62368-1:2020	CE, Outdoor, Type 4X, IP66 -40 °C ≤ Ta ≤ +60 °C CSA certificate: 80226569 CB certificate: CA/35646/CSA
CAN & USA Division	CSA C22.2 No. 30:20 CSA C22.2 No. 25:17 UL 1203-2023 6th Ed UL 913-2022 8th Ed	Class I Div 1 Group B C D T6 Class II Div 1 Group E F G T85°C Certificate: CSA 25CA80226565X
CAN Zone	CSA C22.2 No. 60079-0:19 CSA C22.2 No. 60079-1:16 CSA C22.2 No. 60079-11:14 CSA C22.2 No. 60079-31:15	Ex db [ia Ga] IIB+H2 T6 Gb Ex tb [ia Da] IIIC T85°C Db Certificate: CSA 25CA80226565X
USA Zone	UL 60079-0 Ed 7 UL 60079-1 Ed 7 UL 60079-11 Ed 6 UL 60079-31 Ed 2	Class I Zone 1 AEx db [ia Ga] IIB+H2 T6 Gb Zone 21 AEx tb [ia Da] IIIC T85°C Db Certificate: CSA 25CA80226565X
ATEX	EN IEC 60079-0:2018 EN 60079-1:2014 EN 60079-11:2012 EN 60079-31:2014	Ex II 2 G Ex db [ia Ga] IIB+H2 T6 Gb Ex II 2 D Ex tb [ia Da] IIIC T85°C Db Certificate: CSANe 25ATEX1029X
IECEx	IEC 60079-0:2017 Ed 7 IEC 60079-1:2014 Ed 7 IEC 60079-11:2011 Ed 6 IEC 60079-31:2022 Ed 3	Ex db [ia Ga] IIB+H2 T6 Gb Ex tb [ia Da] IIIC T85°C Db Certificate: IECEx CSAE 24.0074X

1.4. Exposed services

The following services are exposed in factory default state:

- SSH (TCP port 22) – Provides secure command-line access to the equipment.
- SNMPv3 (UDP port 161) – Secure management and monitoring with encryption and authentication.
- mDNS (UDP port 5353) – Enables local service discovery, allowing the use of user-friendly domain names when addressing the equipment, limited to the local network scope.
- ICMP (Ping) – Basic connectivity and availability check.
- HTTPS (TCP port 443) – Provides secure access to the web management interface using TLS encryption.

2. Installation

2.1. Safety Precautions

Always use and save these instructions!

WARNING – The protection provided by the Gateway may be impaired if the equipment is not used in the manner specified within this document.

WARNING – Do not open the Gateway enclosure when energized when an explosive atmosphere may be present.

WARNING – All 16 of the Gateway enclosure cover screws must tightened to 48 Nm (35.4 ft-lb) torque before exposure to a potentially explosive atmosphere.

WARNING – The Gateway Protective Earth Ground connection must always be in place using a minimum 10 AWG (4 mm^2) conductor.

WARNING – To reduce the risk of ignition of hazardous atmospheres, conduit runs must have a sealing fitting connected within 18 inches (45 cm) of the enclosure.

WARNING – The Gateway enclosure is a potential electrostatic charge hazard. Refer to Section 3.1 for guidance on the prevention of electrostatic charge buildup.

WARNING – Entry conductors or cable and cable glands suitable for at least 70 °C are required.

WARNING – The KONA Macro Ex Gateway must always be mounted with the bulkhead connector field facing down towards earth.

WARNING – The KONA Macro Ex Gateway RF antennas must be limited in gain. The LoRa antenna gain must not exceed 6 dBi. The cellular antenna gain must not exceed 2 dBi.

WARNING – KONA Macro Ex Gateway installation and maintenance must be in accordance with applicable standards and codes such as:

- NFPA 70, *National Electrical Code*
- CSA C22.1, *Canadian Electrical Code*
- IEC 60079-14*, Explosive atmospheres – Part 14: Electrical installations design, selection and erection*
- IEC 60079-25, *Explosive atmospheres – Part 25: Intrinsically safe electrical systems*
- IEC 60079-17*, Explosive atmospheres - Part 17: Electrical installations inspection and maintenance*

WARNING – The Gateway might have more than one power supply connection. All power sources must be shut off to de-energized the Gateway.

WARNING – Ensure the KONA Macro Ex Gateway Protective Earth Ground connection is properly

terminated prior to the connection of any other interface.

WARNING – Ensure that the KONA Macro Ex Gateway is properly secured to eliminate any physical hazard to people or property. The Gateway must be securely mounted according to the mounting instructions prior to any cable connection and operation.

WARNING – The KONA Macro Ex Gateway may only be powered from a power supply unit with a limited energy electric circuit (SELV or LPS) or Class 2 as defined in the Canadian Electrical Code C22.1, Section 16-200 and/or National Electrical Code (NFPA 70), article 725.121.

WARNING – All RF antennas and cables connected to the KONA Macro Ex Gateway shall have a 50 Ω nominal impedance.

CAUTION – The safety of any system incorporating the KONA Macro Ex Gateway is the responsibility of the assembler of the system.

CAUTION – This system may have remotely located antennas. Do not work on the system during periods of lightning activity.

CAUTION – For the DC input power connection, the DC positive terminal must be at a positive potential relative to the DC negative terminal. If the connection polarity is reversed, the unit will not sustain damage but will not operate until the connection polarity is corrected.

CAUTION – Although the KONA Macro Ex Gateway can be powered through either the direct DC input or the power over Ethernet (PoE) input, simultaneous application of power to both inputs may result in unexpected operation and should be avoided.

2.2. Specific Conditions of Use

1. The equipment supply shall be powered with an approved ES1, PS2 Power over Ethernet (PoE) IEEE 802.3at (Type 2 Class 4) or ES1 (SELV), PS2 Limited Power Source (LPS) power adaptor or DC input source earthed suitable for use at altitude 4000 m.
2. The cable selection and provisioning along with required entry hardware such as cable glands, adapters, mating connector to RF connectors and conduit fittings are to be site selected and provided. All cables and hardware are not a part of certification and shall be suitably approved and shall be in compliance with IEC 60079-14 requirements, providing and maintaining a degree of protection of at least IP66.
3. The equipment shall be reliably earthed in final installation through a permanently connected Protective Earth (PE) Ground conductor. The Protective Earth Ground connection is made through a double hole lug to the termination point located on the side of the enclosure. The cable lug must have 6.35 mm ø holes on 16 mm centers (0.25” ø on 0.63” centers). The required ground cable gauge is #10 AWG (4 mm2) minimum. This ground connection to earth is always required. Follow instructions from this User Guide for Ground cable installation.
4. External fasteners used for securing flameproof joints shall have a minimum property class of A4- 70.

5. The flameproof joints are not intended to be repaired.
6. The fixed installation equipment is coated with paint finish and may generate an ignition capable level of electrostatic charge under certain extreme conditions. The user shall ensure that the equipment is not installed in a location where it might be subjected to external conditions of high airflow rate that might cause a build-up of electrostatic charges on non-conducting surfaces. Additionally, cleaning of the equipment shall be done only with damp cloth.
7. For the DC input power connector, the DC positive pin must be at a positive potential relative to the DC negative pin. If the polarity is reversed, the unit will not sustain damage but will not operate until the connection polarity is corrected.
8. End users may select their own antenna and it is end users' responsibility to choose the antenna that meets the requirement of Simple Apparatus as per Clause 5.7, IEC 60079-11, Edition 6
9. End users may select their own RF cable and it is end users' responsibility to choose cable with following limits:
   Maximum RF cable length = 42 m
   Maximum RF cable capacitance = 250 pF/m
   Maximum RF cable inductance = 0.6 µH/m
10. The Maximum Um shall not exceed 60 Vdc.
11. The Antenna must provide isolation from earth when required and be installed according to the instructions provided in this User Guide.

2.3. Unpacking and Inspection

The following should be considered during the unpacking of a KONA Macro Ex Gateway.

1. Inspect the shipping carton and report any significant damage to TEKTELIC.
2. Unpacking should be conducted in a clean, dry, and non-hazardous location.
3. Do not discard the shipping box or inserts as they will be required if a unit is returned for repair or re-configuration.

2.4. Required Equipment for Installation

The following site provided material and tools are required to install the KONA Macro Ex Gateway module:

1. A torque wrench with:
   - a 5 mm hex bit
   - a 10 mm hex bit
   - a 5 mm 6-point socket
   - a 25.4 mm 6-point socket
   - a 26 mm crowfoot adapter
2. Anti-oxidant compound (NO-OX-ID, Penetrox, Noalox, Ox-Gard or equivalent).

3. A small wire brush.
4. A clean cloth.
5. Weatherproofing tape kits for the RF connectors (Scotch Wireless Weatherproofing Kit, WK-101 recommended).
6. Quantity four, size M8 fasteners of appropriate length with any required locking and anchoring hardware selected according to the intended mounting structure.
7. Appropriately approved M25 or ¾" NPT cable entry hardware and tools as required by the installation details.

2.5. Mounting

The KONA Macro Ex Gateway is designed to be mounted to a vertical frame, wall, or other secure vertical structure using the four supplied mounting tabs. Ensure that the structure to which the Gateway is being mounted is secure and able to support a dead load of at least 45 kg (99 lbs). The Gateway must always be mounted with the bulkhead connector field facing down towards earth. The area below the Gateway must be free of any obstruction to cable ingress.

The KONA Macro Ex Gateway mounting procedure is as follows:

1. Fasten all four mounting tabs to the Gateway enclosure using the supplied hardware.
2. Prepare four fastening locations on the mounting structure (pilot holes, clearance holes, anchors, etc.) using the dimension guide in Figure 4, Figure 5, or Figure 6 according to the selected mounting tab orientation.
3. Mount the Gateway using appropriate site provided M8 fasteners.

Figure 3 details securement of the mounting tabs to the back of KONA Macro Ex Gateway enclosure. Each tab may be mounted at an angle of 0°, 45° or 90° orientation according to local needs. For each tab, ensure that the tab alignment pin is properly seated into a hole according to the chosen orientation angle and then secure the tab in place using the provided M8 x 1.25 - 25 mm flat head countersunk fasteners torqued to 15 Nm (11 ft-lb) using a 5 mm hex bit. All four tabs must always be used.

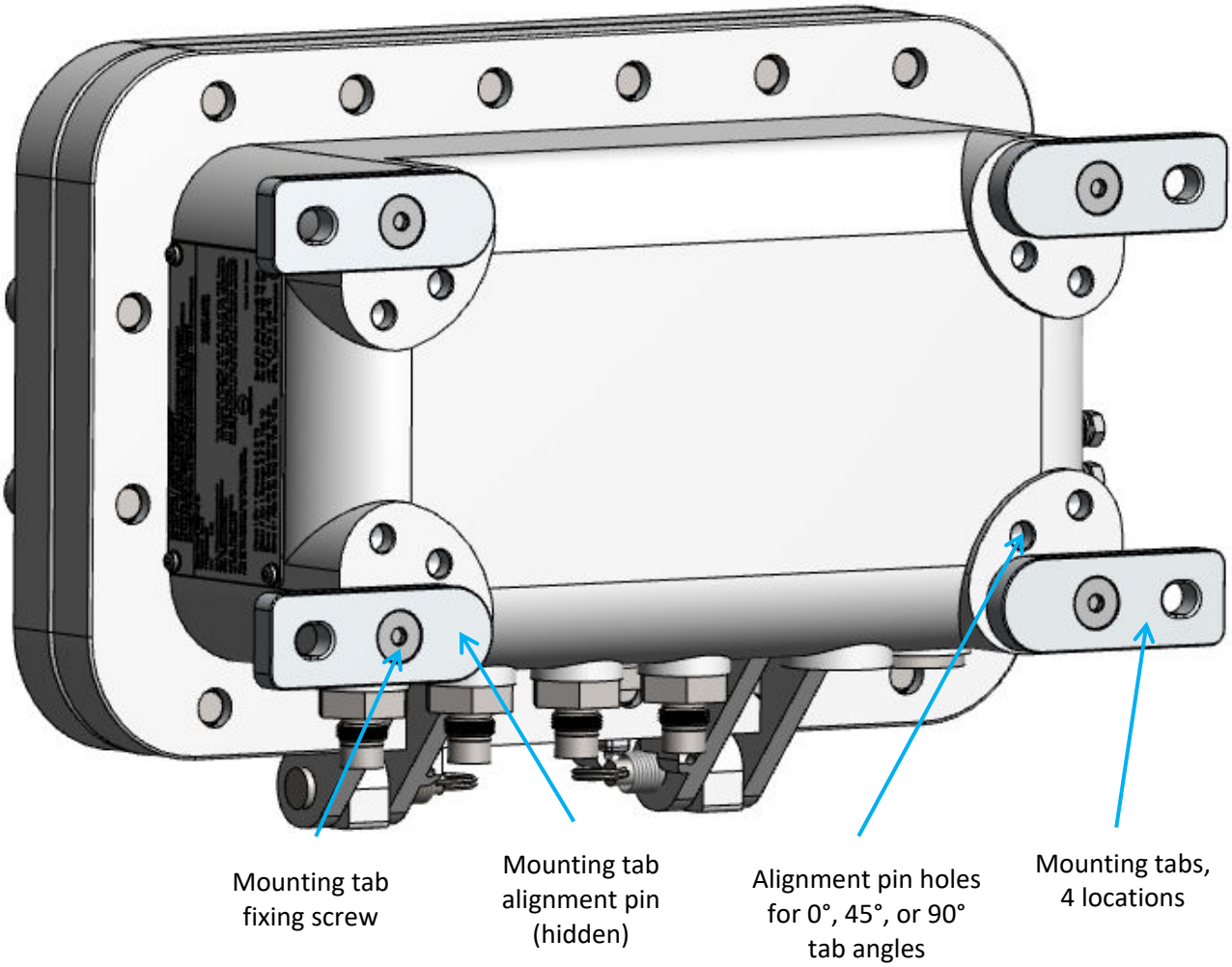

Figure 3: KONA Macro Ex Mounting Tab Installation

Figure 4, Figure 5, and Figure 6 provide dimensions for locating the Gateway mounting points for each possible mounting tab orientation.

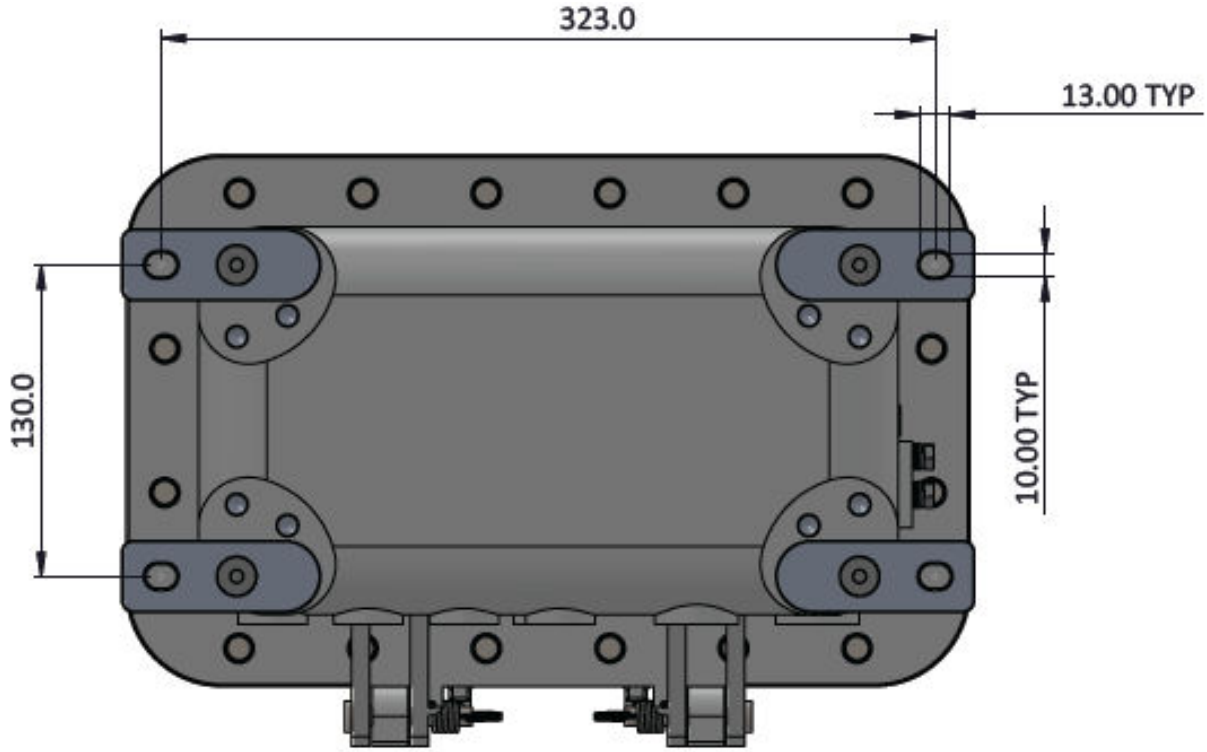

Figure 4: KONA Macro Ex Mounting Hardware Location, 0° Tab Orientation

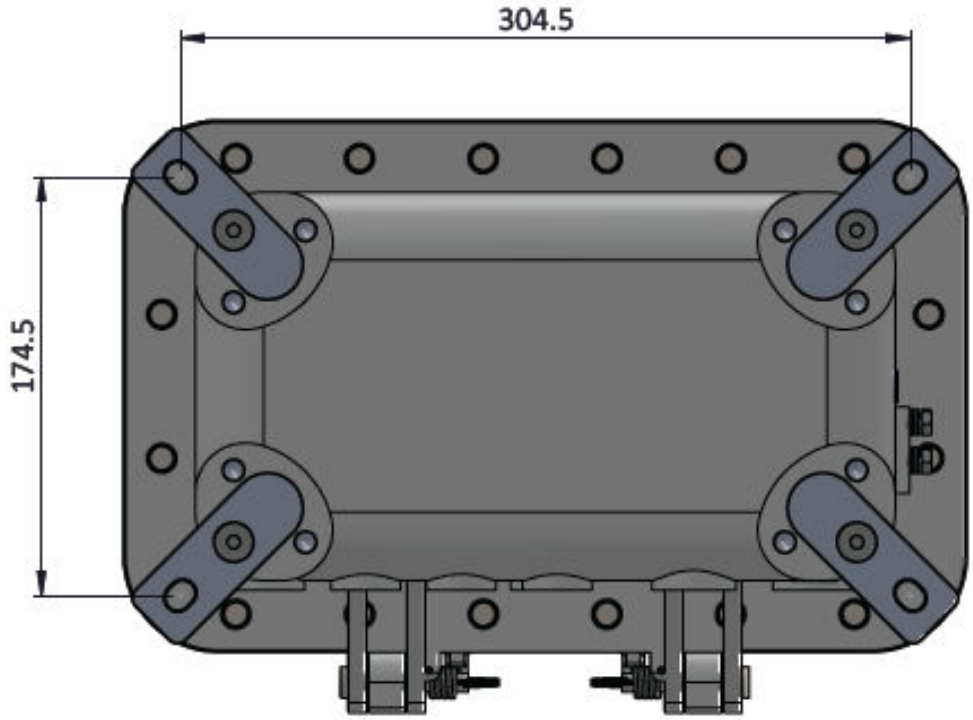

Figure 5: KONA Macro Ex Mounting Hardware Location, 45° Tab Orientation

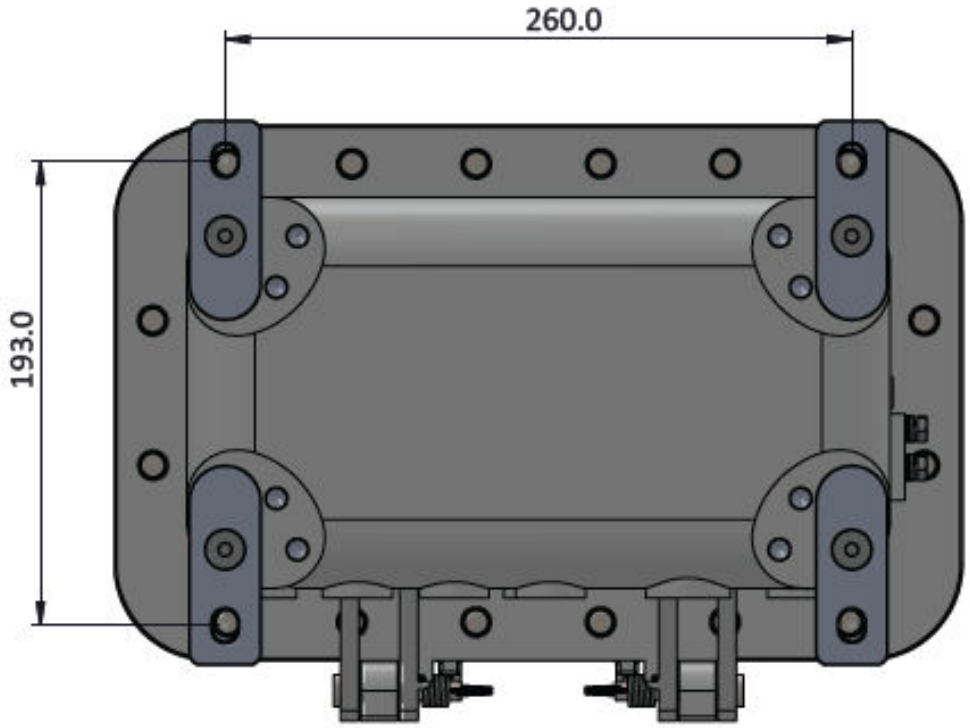

Figure 6: KONA Macro Ex Mounting Hardware Location, 90° Tab Orientation

2.6. Enclosure Bulkhead Interface

Figure 7 details the bulkhead layout for the KONA Macro Ex Gateway enclosure.

The Gateway comes with a factory installed breather and up to four transits with N-type female RF connectors. Depending on the Gateway factory configuration, some of the N-type female RF connector transits may be replaced with approved M20 x 1.5 stopping plugs.

The breather is an integral part of the Gateway design and must remain in place. If the breather is removed for inspection or cleaning, inspect the unit before reinstalling back into the original enclosure opening; the threads of the internal plug of the breather must be fully tightened within the breather body and must not protrude above the body surface. Retorque the breather according to Table 5.

The Gateway also comes with an approved stopping plug in one of the DC Power/Ethernet M25 x 1.5 or ¾" NPT threaded entries. This plug may be removed when both DC power and Ethernet connections are required.

Cable selection and provisioning along with required entry hardware such as cable glands, adapters, and conduit fittings are to be site selected and provided. All cables and hardware shall be suitably approved and shall be in compliance with NFPA 70, National Electrical Code, CSA C22.1, Canadian Electrical Code, or IEC 60079-14 requirements, providing and maintaining a degree of protection of at least IP66 / Type 4X.

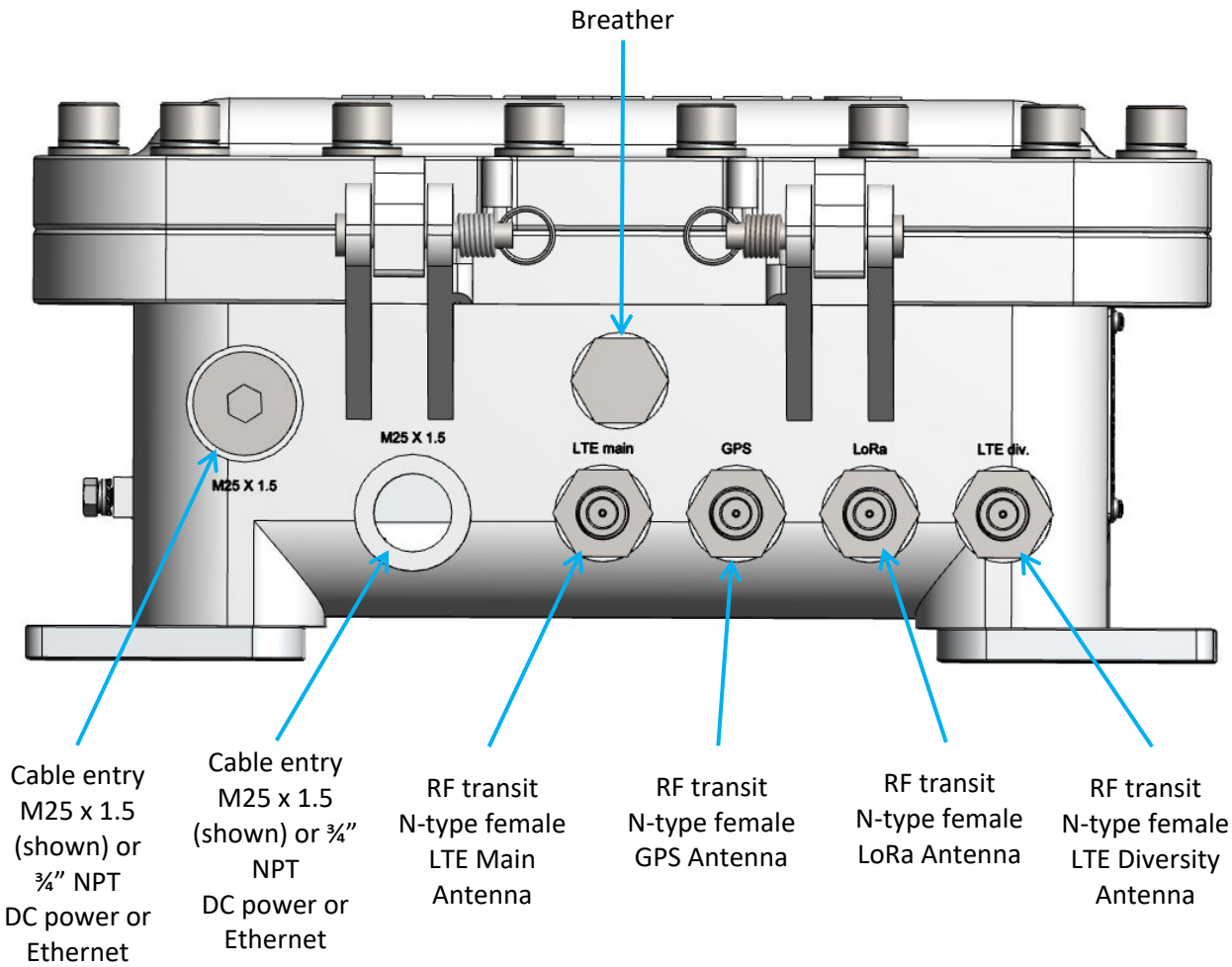

Figure 7: KONA Macro Ex Gateway Bulkhead Layout

All bulkhead components supplied with the Gateway come with integral gaskets (O-rings with the breather and the stopping plugs, and an integrated washer/gasket with the RF transit connectors). These gaskets are required to maintain the Gateway's IP66 and Type 4X ingress ratings. Always inspect the component gaskets for any damage and for proper placement on the component prior to reinstalling the component.

The bulkhead components should be checked for tightness to the enclosure body after Gateway installation and maintenance according to Table 5.

Table 5: KONA Macro Ex Gateway Bulkhead Component Torque Specifications

Component	Tool	Torque
M20 stopping plug	10 mm hex bit	7 Nm (5.2 ft·lbs)
M25 stopping plug	10 mm hex bit	7 Nm (5.2 ft·lbs)
M20 Breather	25.4 mm 6-point socket	7 Nm (5.2 ft·lbs)
M20 RF Transit Adapters	26 mm crowfoot adapter	7 Nm (5.2 ft·lbs)

Site supplied cable and conduit entry devices shall be torqued according to manufacture specifications.

2.7. Ground Cable Installation

The KONA Macro Ex Gateway requires a permanently connected Protective Earth (PE) Ground conductor. The Protective Earth Ground connection is made through a double hole lug to the termination point located on the side of the enclosure as illustrated in Figure 8. The cable lug must have 6.35 mm ø holes on 16 mm centers (0.25” ø on 0.63” centers). The required ground cable gauge is #10 AWG (4 mm^2) minimum. This ground connection to earth is always required.

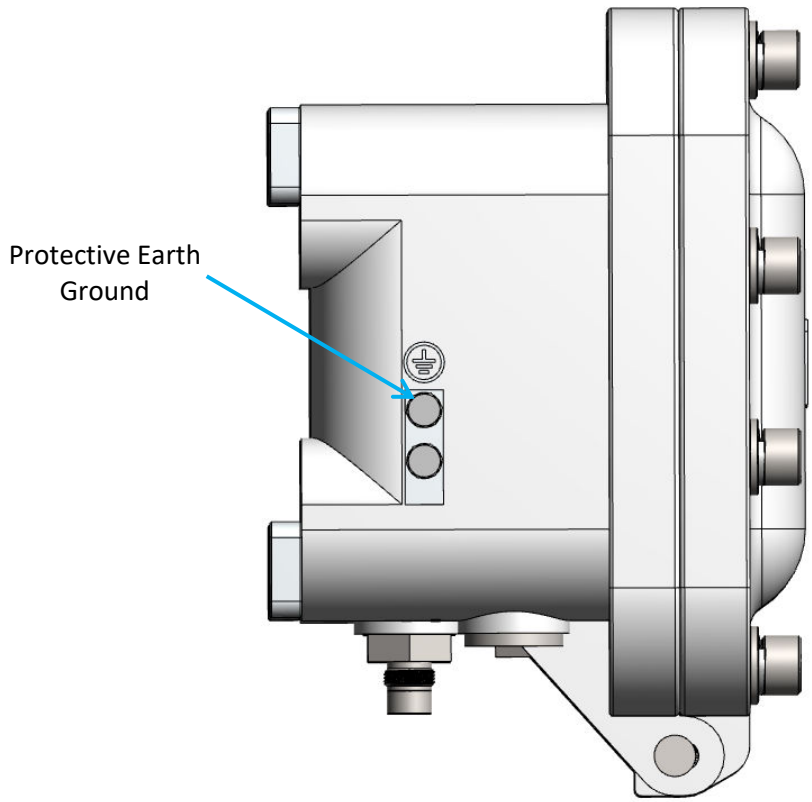

Figure 8: KONA Macro Ex Gateway PE Ground Connection Location

The KONA Macro Ex Gateway grounding system shall follow local and national electrical codes. The Protective Earth Ground conductor terminated at the double hole lug point is mandatory and must be the first connection made to the Gateway during installation. Proper routing and termination of this cable is key to robust lightning withstand performance; in high susceptibility installations, every effort shall be made to minimize connection inductance and ground bed resistance.

The ground cable installation steps are as follows:

1. If required, lightly abrade the surface of the lug grounding surface with a fine wire brush to remove any oxide layer.
2. Use a clean cloth to remove any debris from this surface.

3. Immediately coat the contact surface with a thin layer of anti-oxidant compound.
4. Install the ground cable through its double hole lug onto the chassis ground point using the two supplied M6 x 1.0 – 16 mm bolts with flat and star lock washers, torqued to 10.4 Nm (7.7 ft·lbs) (see Figure 9).

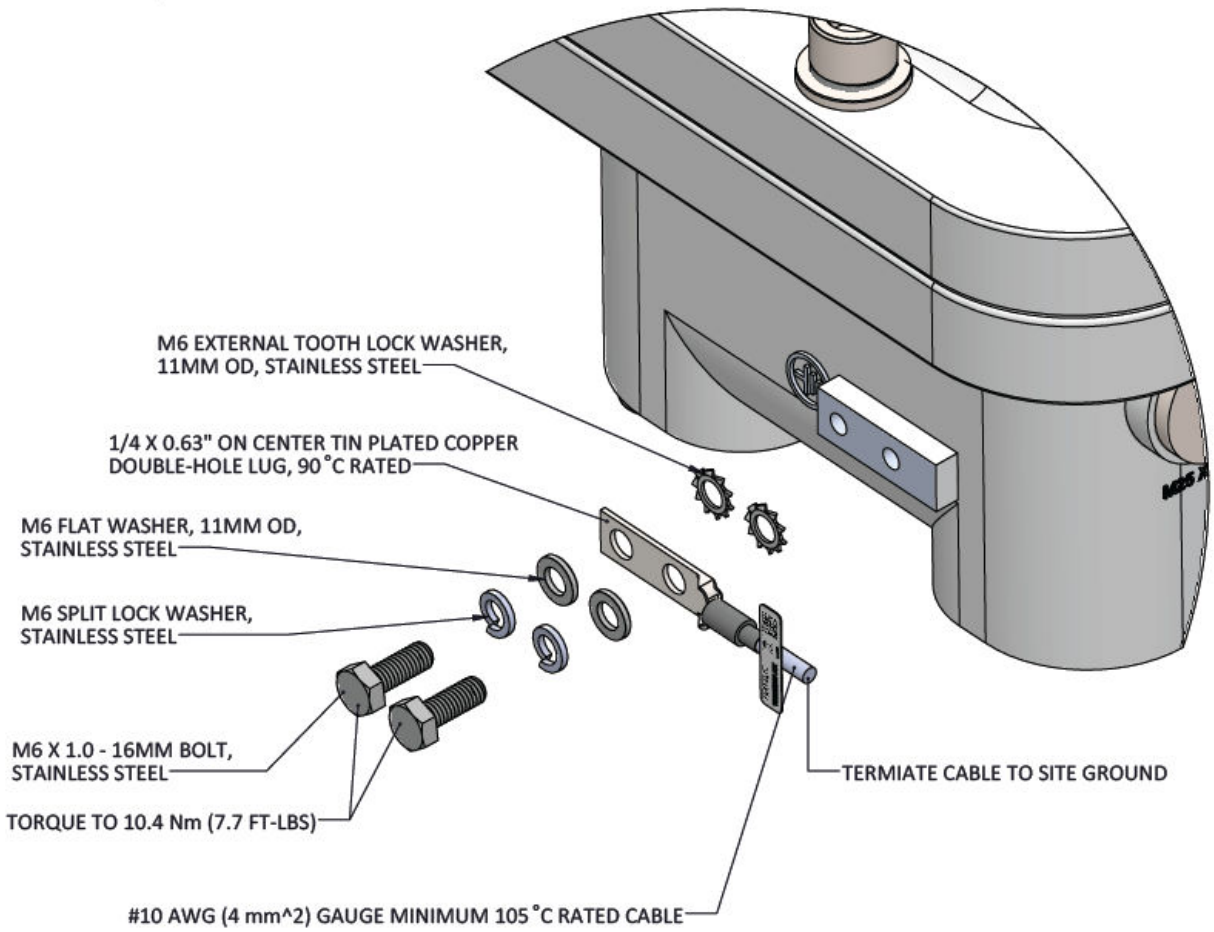

Figure 9: KONA Macro Ex Gateway PE Ground Installation

2.8. LoRa RF Antenna Connection

The LoRa RF antenna connects through a cable to an N-Type female connector located on the bulkhead of the Gateway. The LoRa RF connector center conductor and shield are grounded to earth through the Gateway's earth ground connection. The system designer must take note of this when installing the Gateway in accordance with standards such as IEC 60079-14.

The Gateway LoRa RF antenna port is a 50 Ω RF system, the RF cable and antenna connected shall have a 50 Ω nominal impedance.

The Gateway LoRa RF antenna port is a grounded intrinsically safe circuit. This allows for the use of a standard antenna upon assessment as simple apparatus by a qualified person. Antennas supplied by TEKTELIC for the Macro Ex Gateway have already been assessed as simple apparatus.

The LoRa antenna gain must be limited to 6 dBi to meet EIRP limit requirements of Clause 6.6.2 of CSA/UL 60079-0.

Torque the mating N-type RF cable connector to 2.0 Nm (1.5 ft·lbs).

Although the N-Type bulkhead connectors on the Gateway provide the rated ingress protection, the mating cable connector is likely not water proof and must be taped to provide protection for the cable. TEKTELIC recommends taping with Scotch Wireless Weatherproofing Kit, WK-101. Follow the taping procedures outlined by the supplier of this tape system.

2.9. Cellular RF Antenna Connections

The KONA Macro Ex Gateway supports connection to a main and a diversity cellular RF antenna when factory configured. The cellular antennas attach through cables to the N-Type connectors located on the bulkhead of the Gateway. The cellular RF connector center conductors and shields are grounded to earth through the Gateway's Earth Ground connection. The system designer must take note of this when installing the Gateway in accordance with standards such as IEC 60079-14.

The Gateway cellular RF antenna ports are a 50 Ω RF system, the RF cables and antennas connected shall have a 50 Ω nominal impedance.

The Gateway's cellular RF antenna ports are grounded intrinsically safe circuits. This allows for the use of standard antennas upon assessment as simple apparatus by a qualified person. Antennas supplied by TEKTELIC for the Macro Ex Gateway have already been assessed as simple apparatus.

The cellular antenna gain must be limited to 2 dBi to meet EIRP limit requirements of Clause 6.6.2 of CSA/UL 60079-0.

Torque the mating N-type RF cable connector to 2.0 Nm (1.5 ft·lbs).

Although the N-Type bulkhead connectors on the Gateway provide the rated ingress protection, the mating cable connector is likely not water proof and must be taped to provide protection for the cable. TEKTELIC recommends taping with Scotch Wireless Weatherproofing Kit, WK-101. Follow the taping procedures outlined by the supplier of this tape system.

For systems which do not have cellular backhaul, the bulkhead RF transit connectors are replaced with approved stopping plugs.

2.10. GPS RF Antenna Connection

The GPS antenna attaches through a cable to the N-Type female connector located on the bulkhead of the Gateway. The GPS RF connector center conductor and shield are grounded to earth through the Gateway's earth ground connection. The system designer must take note of this when installing the Gateway in accordance with standards such as IEC 60079-14.

The Gateway GPS RF antenna port is a 50 Ω RF system, the RF cable and antenna connected shall have

a 50 Ω nominal impedance.

The Gateway's GPS antenna port is a grounded intrinsically safe circuit. This allows for the use of a standard antenna upon assessment as simple apparatus by a qualified person. Antennas supplied by TEKTELIC for the Macro Ex Gateway have already been assessed as simple apparatus.

The GPS connection requires a passive antenna and therefore the cable length should be kept as short as possible to minimize RF power loss.

Torque the mating N-type RF cable connector to 2.0 Nm (1.5 ft·lbs).

Although the N-Type bulkhead connectors on the Gateway provide the rated ingress protection, the mating cable connector is likely not water proof and must be taped to provide protection for the cable. TEKTELIC recommends taping with Scotch Wireless Weatherproofing Kit, WK-101. Follow the taping procedures outlined by the supplier of this tape system.

2.11. Opening and Closing the Enclosure

Refer to Section 2.1 Safety Precautions for important safety information.

It is important to take care to not damage the enclosure flame path flanges or the environmental gasket, located in a channel on the enclosure flange, when opening the enclosure, while working on the open enclosure, and when closing the enclosure. It is not allowed to repair the flame path.

To open the enclosure, fully loosen and remove all 16 cover screws, taking care to store all of the fastening hardware for reuse. It is advisable to remove last a screw near the top center of the enclosure while supporting the cover, as it is heavy and may fall open unexpectedly once all screws are removed. Store each screw along with its lock washer and flat washer for reuse when closing the enclosure. The cover is hinged along the bottom edge; once the screws are disengaged, lower the cover carefully to its open position, where it will be held by built-in stops. Handle the cover with caution to ensure a controlled lowering process.

To help facilitate opening a cover which does not separate freely from the enclosure body, a pry feature is located top center of the cover as illustrated in Figure 10. Care must be taken to ensure no tool contact outside of the pry feature area.

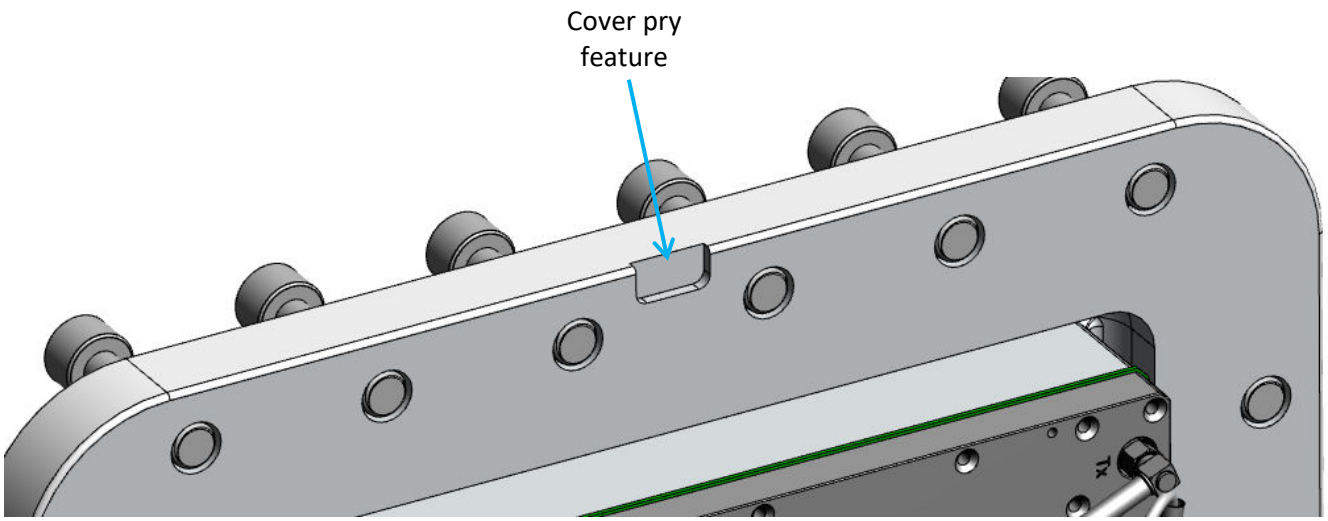

Figure 10: KONA Macro Ex Gateway Cover Pry Feature Location

Before closing the enclosure cover:

- inspect the enclosure flame path on the base and cover flanges for any dirt or other foreign objects and clean with a soft cloth if necessary
- inspect the enclosure flame path on the base and cover flanges for any damage (note that it is not allowed to repair the flame path),
- the base of the enclosure implements stainless steel thread inserts for receiving the cover screws, inspect the cover screw receiving holes to ensure that the thread inserts are still in place and are not protruding above the flange surface,
- inspect the gasket on the cover flange for any damage and ensure it remains securely seated in its proper location.

For improved resistance to corrosion, a corrosion inhibiting, non-hardening, and non-evaporative silicone grease may be applied to the flame path (flange). The recommended grease is Loctite LB 8104 or Loxeal No. 9.

To close the enclosure, rotate the cover up and into place while ensuring that all cables between the cover and the enclosure body are neatly routed and not bent or stressed and are not pinched between the cover and the enclosure body. Once the cover is in place and its flange is fully flush with the enclosure body flange, install all 16 of the Gateway cover screws, each with its lock washer and flat washer as illustrated in Figure 11. The Gateway cover screws shall have a minimum property class of A4-70.

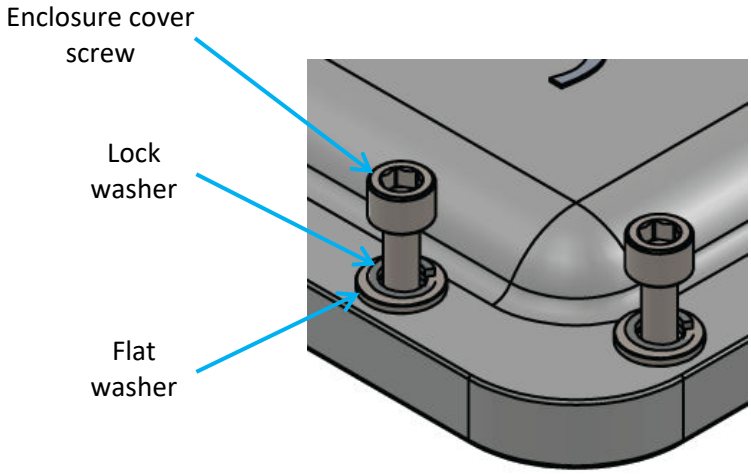

Figure 11: KONA Macro Ex Gateway Cover Screw Hardware Stack-up

Torque each screw to 48 Nm (35.4 ft-lb) using a 10 mm hex bit while following a star pattern order similar to that illustrated in Figure 12. It is recommended to perform two or three passes in this pattern, each with increasing torque, ending at the recommended torque.

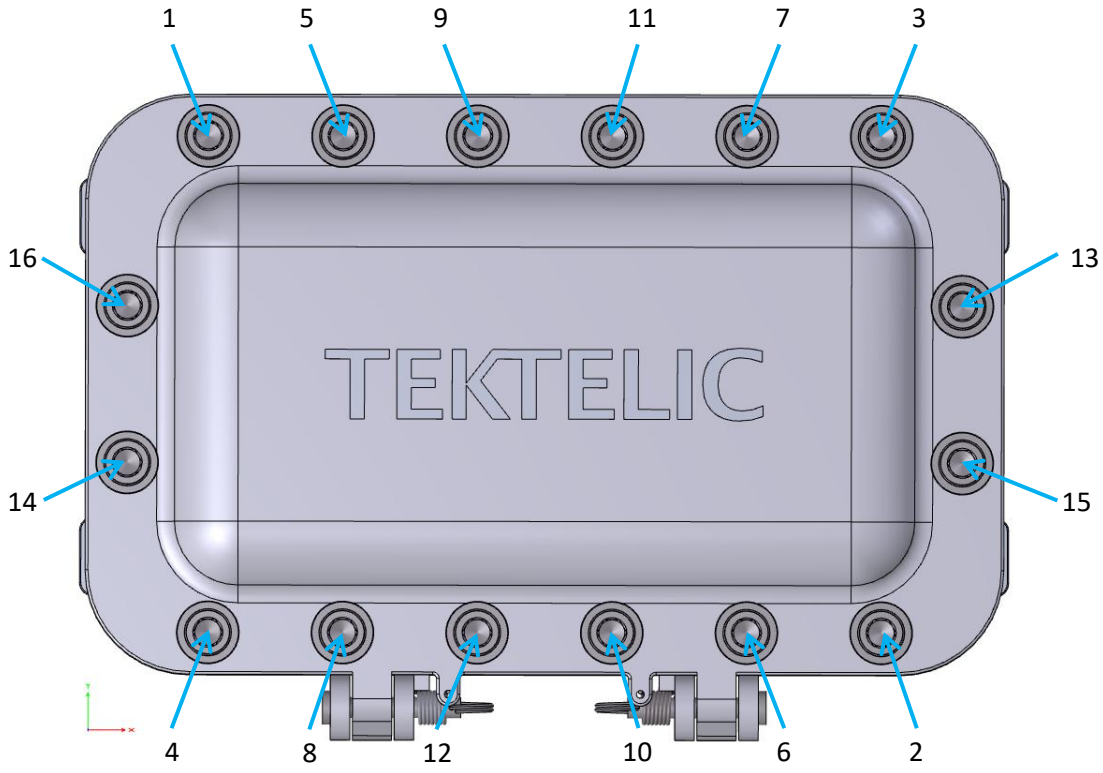

Figure 12: KONA Macro Ex Gateway Recommended Cover Screw Torque Pattern

2.12. Cable Entry

Two threaded entries are provided to facilitate DC power and Ethernet entry into the Gateway enclosure. Depending on the factory ordered configuration these entries may be M25 x 1.5 or ¾" NPT thread type. Always confirm the thread type by checking the printed information next to the entry hole. The Gateway is shipped with one entry covered with a temporary disposable plastic plug and a second entry closed with an approved stopping plug. Always use first the entry closed with the temporary disposable plastic plug. The second entry closed with the approved stopping plug can be used when both DC power and Ethernet are required. Either entry may be used as long as the unused entry is blocked using the approved stopping plug.

Cable selection and provisioning along with required entry hardware such as cable glands, adapters, and conduit fittings are to be site selected and provided. All cables and hardware shall be suitably approved and shall be in compliance with NFPA 70, National Electrical Code, CSA C22.1, Canadian Electrical Code, or IEC 60079-14 requirements, providing and maintaining a degree of protection of at least IP66.

Typical cable entry configurations are:

- DC Power with cellular backhaul, where only one threaded entry is used.
- Ethernet with PoE, where only one threaded entry is used.
- DC Power with Ethernet backhaul, where both threaded entries are used.

If a DC power feed is installed into the enclosure, the DC power conductors are terminated at the copper interface board connector J1.

If an Ethernet feed is installed into the enclosure, the Ethernet pairs are terminated at the copper interface board connector J2.

In addition, the copper interface board connector J1 allows for the termination of up to two ground bonding conductors. Note that the external double hole lug ground point must be used for the Gateway protective earth ground termination, the internal ground terminations may be used for additional interface bonding, such as for cable drain wires.

2.13. Internal Interfaces

Figure 13 details the internal interfaces for the KONA Macro Ex Gateway. The only internal user connections available are for DC Power, Ethernet, and auxiliary ground bonding. All other internal connections are factory made and may be repaired but are not to be altered.

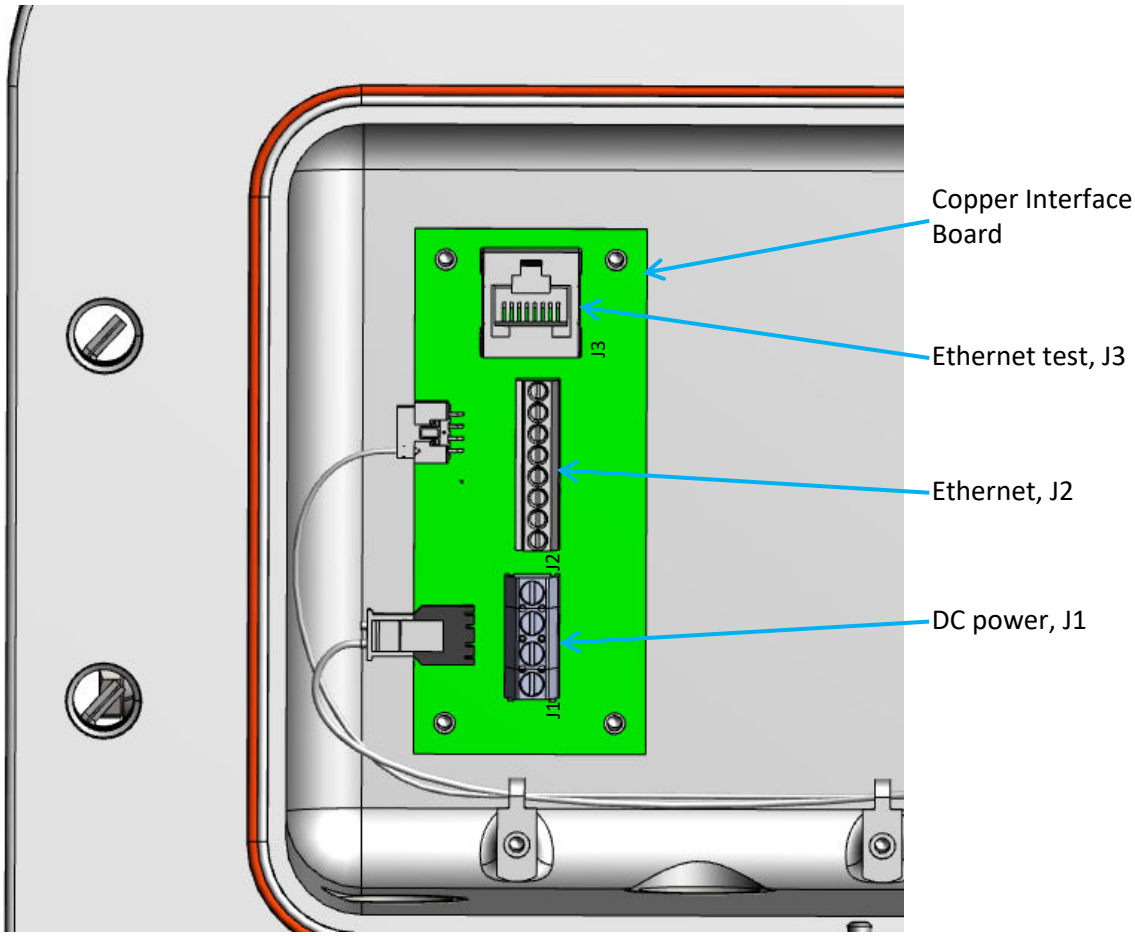

Figure 13: KONA Macro Ex Gateway Internal Interface Connections

Table 6 summarizes the Gateway internal interface connection specifications.

Table 6: KONA Macro Ex Gateway Internal Connection Specifications

Interface	Terminal	Signal	Mating Specifications
J1 DC Power	1	Ground (GND)	0.2 to 3.3 mm2 (28 to 12 AWG) 6 mm (0.24”) strip length M3 slotted screw 0.5 Nm (4 lb-in) torque
	2	DC positive (DCP)	
	3	DC negative (DCN)	
	4	Ground (GND)	
J2 Ethernet	1	MDI 0N (ORN)	0.05 to 1.3 mm2 (30 to 16 AWG) 6 mm (0.24”) strip length M2 slotted screw 0.4 Nm (3.5 lb-in) torque
	2	MDI 0P (ORN/W)	
	3	MDI 1N (GRN)	
	4	MDI 1P (GRN/W)	
	5	MDI 2P (BLU)	
	6	MDI 2N (BLU/W)	
	7	MDI 3N (BRN)	
	8	MDI 3P (BRN/W)	

The J1 ground terminals are bonded to the Gateway enclosure and may be used for terminating a power feed ground conductor or a cable shield drain wire from either of the DC power or Ethernet cables. Note that the specified external connection to the enclosure double hole lug ground termination point is always required even if a ground wire is provisioned with one of the entry cables.

An ANSI/TIA-568, T568B standard RJ-45 receptacle J3 is also provided as an alternate Ethernet termination point from the J2 terminal block. Only one of these connectors may be used concurrently as they are wired together on the PCB. The J2 terminal block is intended for a permanent robust Ethernet connection whereas the J3 RJ-45 receptacle is intended for convenience with local configuration and test activities.

2.14.SIM Installation

The KONA Macro Ex Gateway can be provisioned with a SIM card if cellular backhaul is to be utilized. The Gateway is equipped with a push-push connector which accepts a single nano SIM card. The connector location is shown in Figure 14.

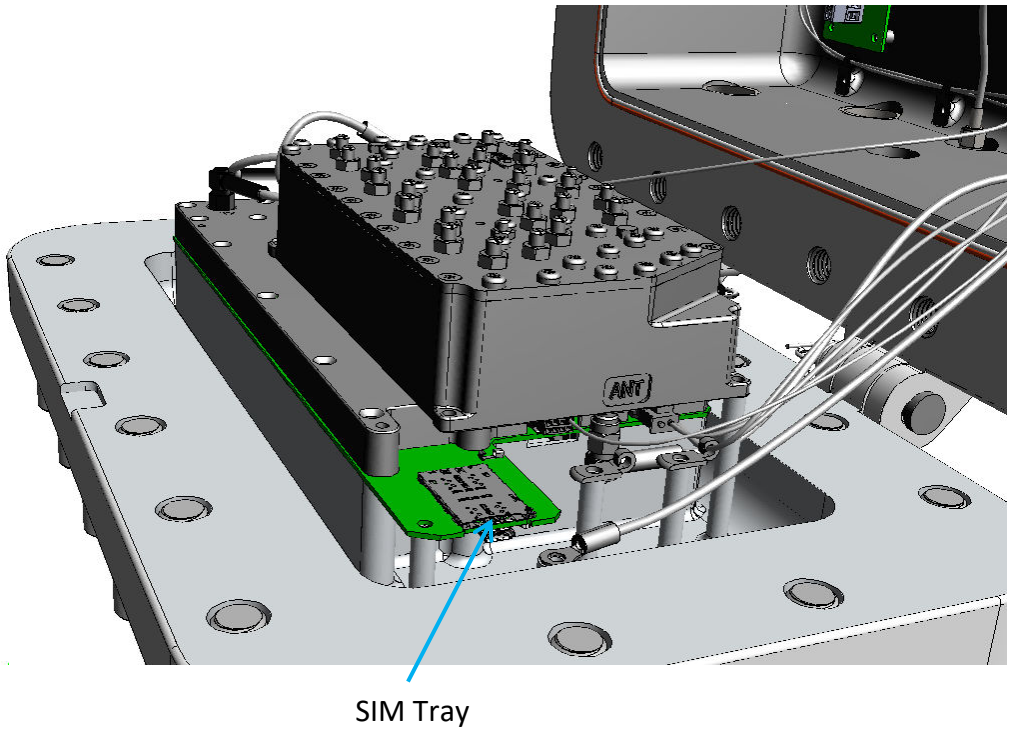

Figure 14: KONA Macro Ex SIM Tray Location

3. Usage

3.1. Prevention of Electrostatic Charge Buildup

The Gateway enclosure is coated with a paint finish capable of building up an ignition capable level of electrostatic charge under certain extreme conditions. The following steps should be taken to minimize charge buildup:

- Ensure the Gateway enclosure is earth grounded as described in Section 2.6
- Use only a damp cloth when cleaning the Gateway enclosure
- Avoid installing the Gateway in an area of high-rate airflow

3.2. Maintenance

The KONA Macro Ex Gateway has no specified regular maintenance. The operator should follow any applicable industry standards such as IEC 60079-17, *Electrical Equipment Inspection and Maintenance* or NFPA 70B, *Standard for Electrical Equipment Maintenance*.

If the Gateway enclosure becomes dirty, it can be cleaned with gentle wiping using a clean soft cloth slightly dampened with clean water.

4. Radio Compliance Statements

Federal Communication Commission

This device complies with Part 15 of the FCC Rules. Operation is subject to the following two conditions:

- This device may not cause harmful interference, and
- This device must accept any interference received, including interference that may cause undesired operation.

To comply with FCC exposure limits for general population / uncontrolled exposure, this device should be installed at a distance of 30 cm from all persons and must not be co-located or operating in conjunction with any other transmitter.

Changes or modifications not expressly approved by the party responsible for compliance could void the user's authority to operate the equipment. This equipment has been tested and found to comply with the limits for a Class A digital device, pursuant to Part 15 of the FCC Rules. These limits are designed to provide reasonable protection against harmful interference in a residential installation. This equipment generates uses and can radiate radio frequency energy and, if not installed and used in accordance with the instructions, may cause harmful interference to radio communications.

However, there is no guarantee that interference will not occur in a particular installation. If this equipment does cause harmful interference to radio or television reception, which can be determined by turning the equipment off and on, the user is encouraged to try to correct the interference by one of the following measures:

- Reorient or relocate the receiving antenna.
- Increase the separation between the equipment and receiver.
- Connect the equipment into an outlet on a circuit different from that to which the receiver is connected.

Consult the dealer or an experienced radio/TV technician for help. This device may not cause interference.

Innovation, Science and Economic Development Canada

This device contains licence-exempt transmitter(s)/receiver(s) that comply with Innovation, Science and Economic Development Canada's licence-exempt RSS(s). Operation is subject to the following two conditions:

1. This device may not cause interference.
2. This device must accept any interference, including interference that may cause undesired operation of the device.

This device should be installed and operated with minimum distance 0.4 m from human body.

Innovation, Sciences et Développement économique Canada

L'émetteur/récepteur exempt de licence contenu dans le présent appareil est conforme aux CNR d'Innovation, Sciences et Développement économique Canada applicables aux appareils radio exempts de licence. L'exploitation est autorisée aux deux conditions suivantes:

1. L'appareil ne doit pas produire de brouillage.
2. L'appareil doit accepter tout brouillage radioélectrique subi, même si le brouillage est susceptible d'en compromettre le fonctionnement.

Cet appareil doit être installé et utilise à une distance minimale de 0.4 m du corps humain.

Document History

Version	Issue Date	Status	Comments
0.1	May 17, 2024	Obsolete	Initial release
0.2	Sept 09, 2024	Obsolete	Various updates
0.3	Nov 13, 2024	Obsolete	Various updates
0.4	Nov 29, 2024	Obsolete	Various updates
0.5	Mar 12, 2025	Obsolete	Various updates
1.0	Mar 19, 2025	Obsolete	Approved release
1.1	Apr 21, 2025	Obsolete	Added compliance statements
1.2	Aug 26, 2025	Obsolete	Added specific conditions of use Section
1.3	Oct 15, 2025	Obsolete	Added: Exposed Services section
1.4	Sept 2, 2026	Obsolete	Correction to IEC 60079-11 edition in Table 4
1.5	Oct 09, 2026	Approved	Added kit Order codes Table